N-Channel Enhancement Mode Field Effect Transistor

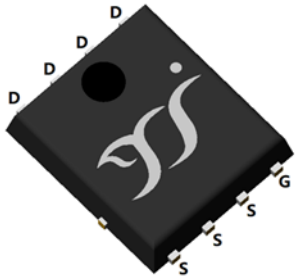

Top View

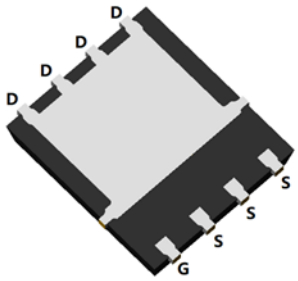

Bottom View

PDFN5060-8L

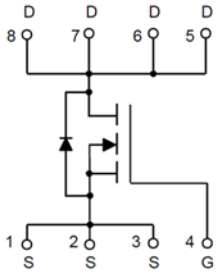

Product Summary

- V_{DS} 150V
- I_D 72A
- $R_{DS(ON)}$(at V_{GS}=10V) ＜11.4mΩ
- $R_{DS(ON)}$(at V_{GS}=4.5V) ＜16mΩ
- 100% EAS Tested
- 100% ▽VDS Tested

General Description

- Excellent package for heat dissipation
- High density cell design for low $R_{DS(ON)}$
- Moisture Sensitivity Level 1
- Epoxy Meets UL 94 V-0 Flammability Rating
- Halogen Free

Applications

- Power switching application
- Uninterruptible power supply
- DC-DC convertor

■ Limiting Values

Parameter	Conditions		Symbol	Min	Max	Unit
Drain-source Voltage			V_{DS}	-	150	V
Gate-source Voltage			V_{GS}	-20	20	
Continuous Drain Current (Note 1,2)	Steady-State	T_A=25℃,V_{GS}=10V	I_D	-	9.5	A
		T_A=100℃,V_{GS}=10V		-	6	
Continuous Drain Current (Note 1,3)	Steady-State	T_C=25℃,V_{GS}=10V,Chip limitation		-	72	
		T_C=100℃,V_{GS}=10V		-	45	
Pulsed Drain Current	T_C=25℃,t_p≤10μs		I_{DM}	-	270	
Maximum Body-Diode Continuous Current	T_C=25℃		I_S		72	
Avalanche Energy (non-repetitive)	T_J=25℃,V_G=10V, R_G=25Ω, L=2mH, I_{AS}=20A		EAS	-	400	mJ
Total Power Dissipation (Note 1,2)	Steady-State	T_A=25℃	P_D	-	2.22	W
		T_A=100℃		-	0.89	
Total Power Dissipation (Note 1,3)	Steady-State	T_C=25℃		-	128	
		T_C=100℃		-	51	
Junction and Storage Temperature Range			T_J ,T_{STG}	-55	150	℃

■Thermal Resistance

Parameter		Symbol	Typ	Max	Units
Thermal Resistance Junction-to-Ambient (Note 2)	Steady-State	$R_{\theta JA}$	-	56.1	℃/W
Thermal Resistance Junction-to-Case	Steady-State	$R_{\theta JC}$	-	0.97	

■ Ordering Information (Example)

PREFERED P/N	PACKING CODE	Marking	MINIMUM PACKAGE(pcs)	INNER BOX QUANTITY(pcs)	OUTER CARTON QUANTITY(pcs)	DELIVERY MODE
YJG011G15A	F1	YJG011G15A	5000	10000	100000	13“ reel

■ Electrical Characteristics

Parameter	Symbol	Conditions	Min	Typ	Max	Units
Static Parameter						
Drain-Source Breakdown Voltage	BV_{DSS}	V_{GS}=0V,I_D=1mA,Tj=25℃	150	-	-	V
Zero Gate Voltage Drain Current	I_{DSS}	V_{DS}=150V,V_{GS}=0V,Tj=25℃	-	-	1	μA
		V_{DS}=150V,V_{GS}=0V,Tj=125℃	-	-	100	
Gate-Source Leakage Current	I_{GSS}	V_{GS}=±20V,V_{DS}=0V,Tj=25℃	-	-	±100	nA
Gate Threshold Voltage	$V_{GS(th)}$	V_{DS}=V_{GS},I_D=250μA,Tj=25℃	1.5	1.95	2.5	V
Static Drain-Source On-Resistance	$R_{DS(ON)}$	V_{GS}=10V,I_D=50A,Tj=25℃	-	9.4	11.4	mΩ
		V_{GS}=4.5V,I_D=20A,Tj=25℃	-	10.5	16	
Diode Forward Voltage	V_{SD}	I_S=50A,V_{GS}=0V,Tj=25℃	-	0.89	1.2	V
Gate Resistance	R_G	f=1MHz,Tj=25℃	-	0.84	-	Ω
Dynamic Parameters						
Input Capacitance	C_{iss}	V_{DS}=75V,V_{GS}=0V,f=1MHz,Tj=25℃	-	3410	-	pF
Output Capacitance	C_{oss}		-	273	-	
Reverse Transfer Capacitance	C_{rss}		-	9.1	-	
Switching Parameters						
Total Gate Charge	Q_g	V_{GS}=10V,V_{DS}=75V,I_D=50A,Tj=25℃	-	49.2	-	nC
Gate-Source Charge	Q_{gs}		-	11.3	-	
Gate-Drain Charge	Q_{gd}		-	7.1	-	
Reverse Recovery Charge	Q_{rr}	I_F=50A,di/dt=100A/μs,V_{GS}=0V,V_R=75V,Tj=25℃	-	141.3	-	nC
Reverse Recovery Time	t_{rr}		-	81.2	-	ns
Turn-on Delay Time	$t_{D(on)}$	V_{GS}=10V,V_{DS}=75V,I_D=50A,R_{GEN}=3Ω, Tj=25℃	-	14.3	-	ns
Turn-on Rise Time	t_r		-	12.4	-	
Turn-off Delay Time	$t_{D(off)}$		-	37.3	-	
Turn-off Fall Time	t_f		-	11.2	-	

Note:

1. The entire application environment impacts the thermal resistance values shown, they are not constants and are only valid for the particular conditions noted.
2. The value of $R_{\theta JA}$ is measured with the device mounted on the 40mm*40mm*1.1mm single layer FR-4 PCB board with 1 in^2 pad of 2oz. Copper, in the still air environment with T_A=25℃.The maximum allowed junction temperature of 150℃. The value in any given application depends on the user's specific board design.
3. Thermal resistance from junction to soldering point (on the exposed drain pad).

■Typical Electrical and Thermal Characteristics Diagrams

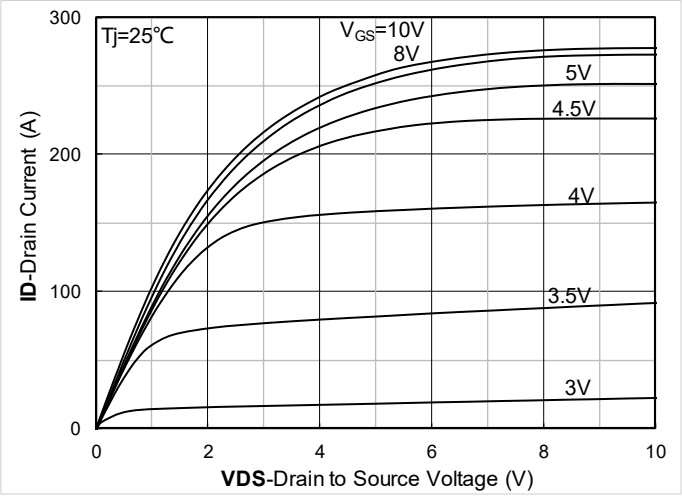

Figure 1. Output Characteristics; typical values

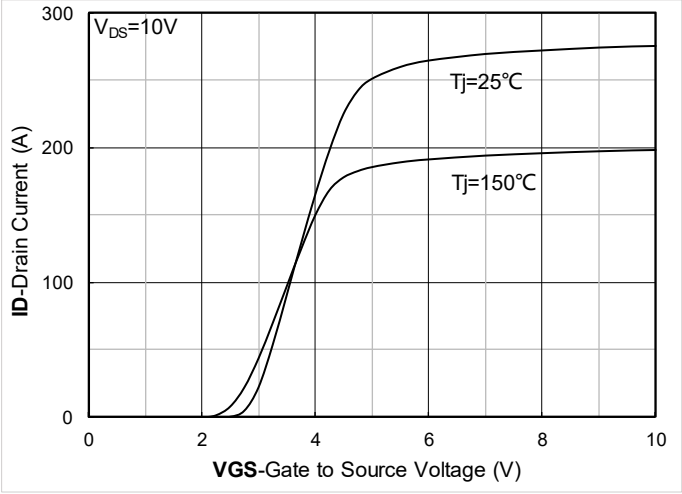

Figure 2. Transfer Characteristics; typical values

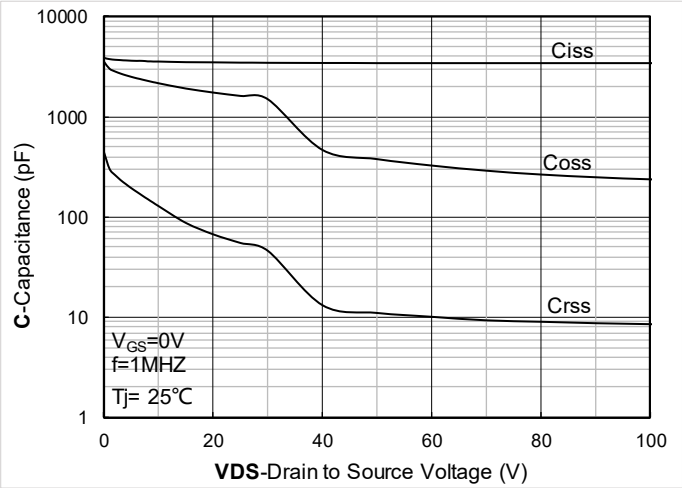

Figure 3. Capacitance Characteristics; typical values

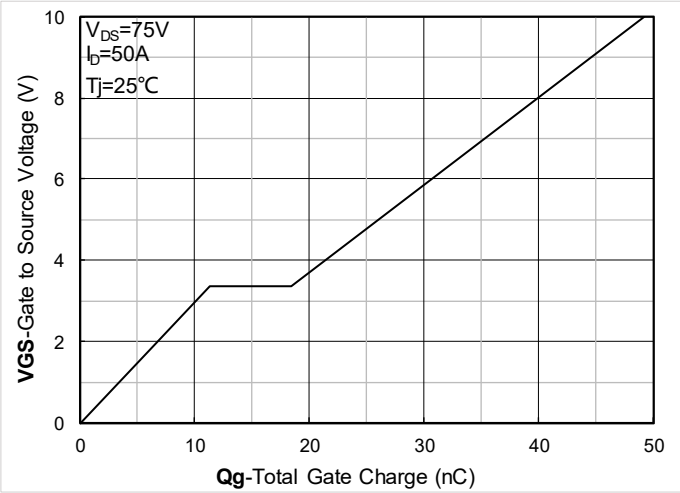

Figure 4. Gate Charge; typical values

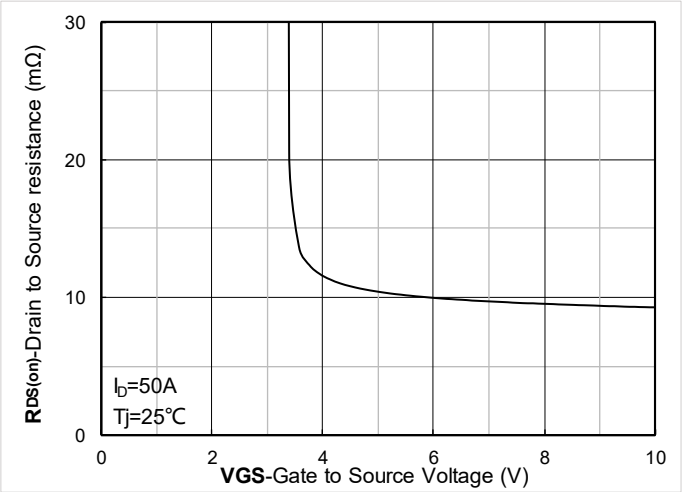

Figure 5. On-Resistance vs. Gate to Source Voltage; typical values

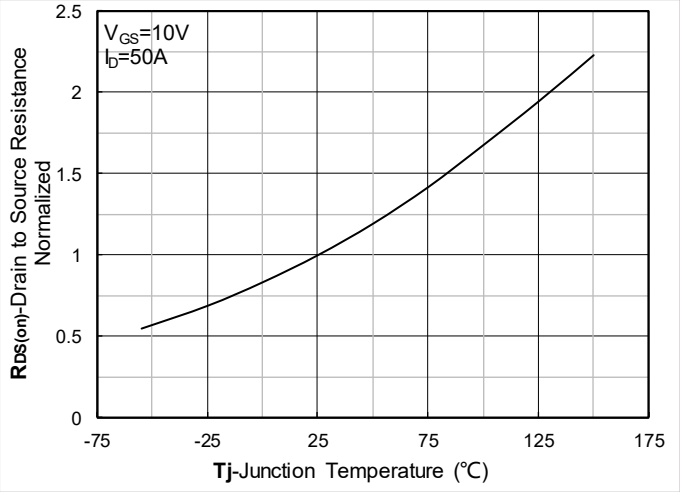

Figure 6. Normalized On-Resistance

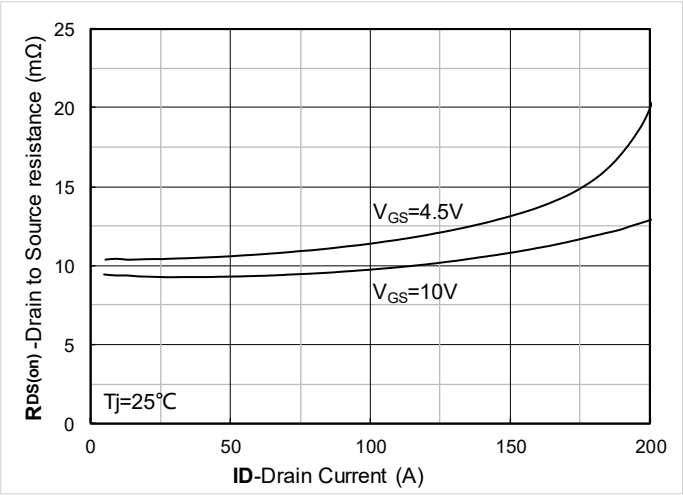

Figure 7. RDS(on) vs. Drain Current; typical values

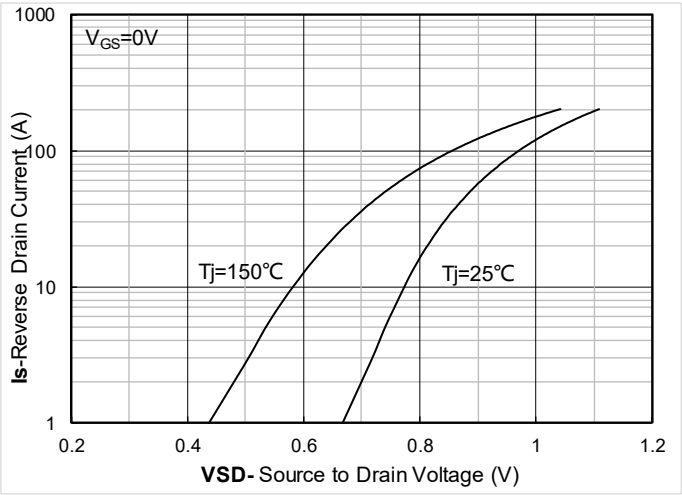

Figure 8. Forward characteristics of reverse diode; typical values

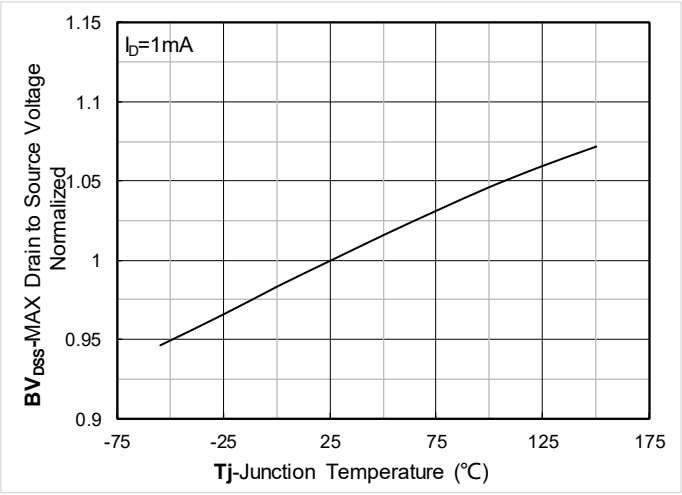

Figure 9. Normalized breakdown voltage

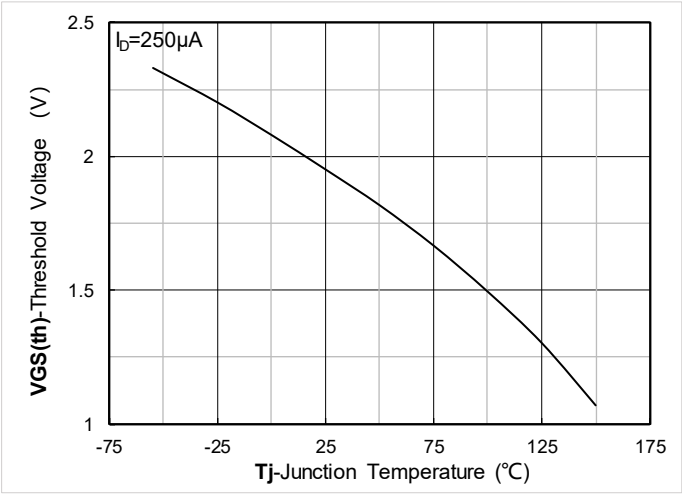

Figure 10. Gate threshold voltage; typical values

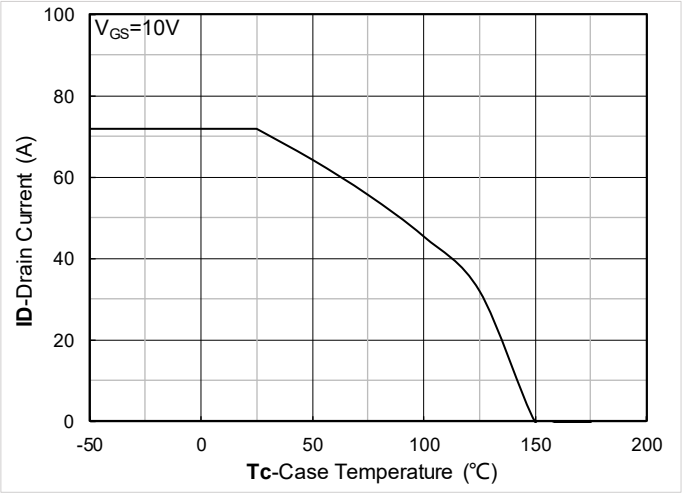

Figure 11. Current dissipation

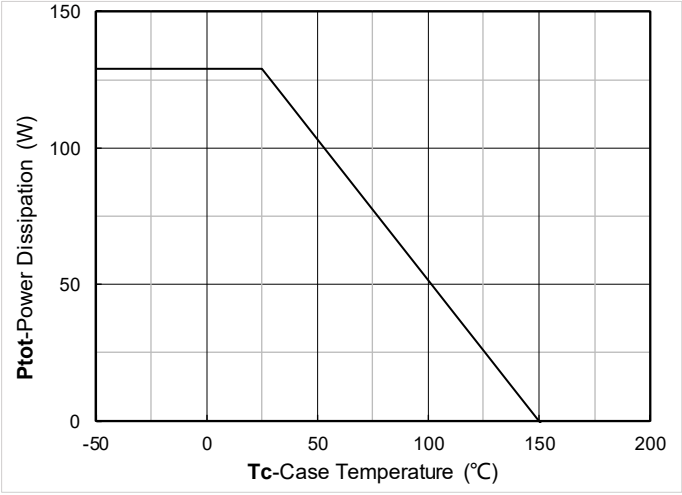

Figure 12. Power dissipation

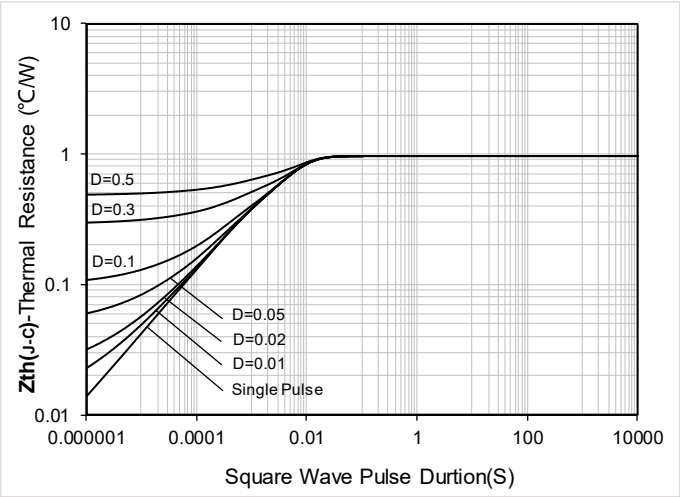

Figure 13. Maximum Transient Thermal Impedance

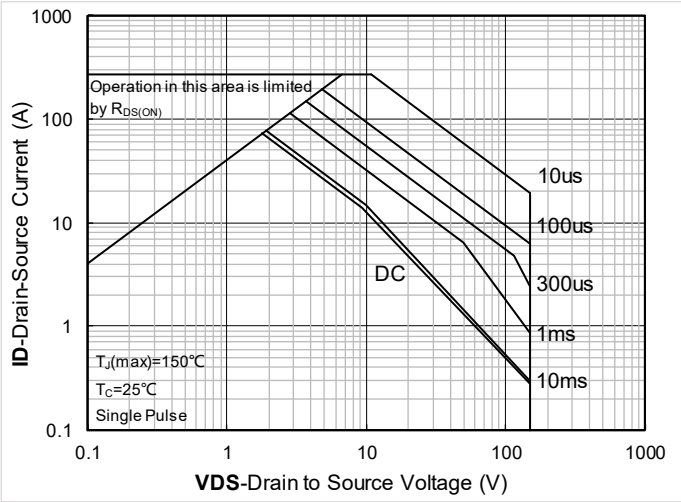

Figure 14. Safe Operation Area

■ Test Circuits & Waveforms

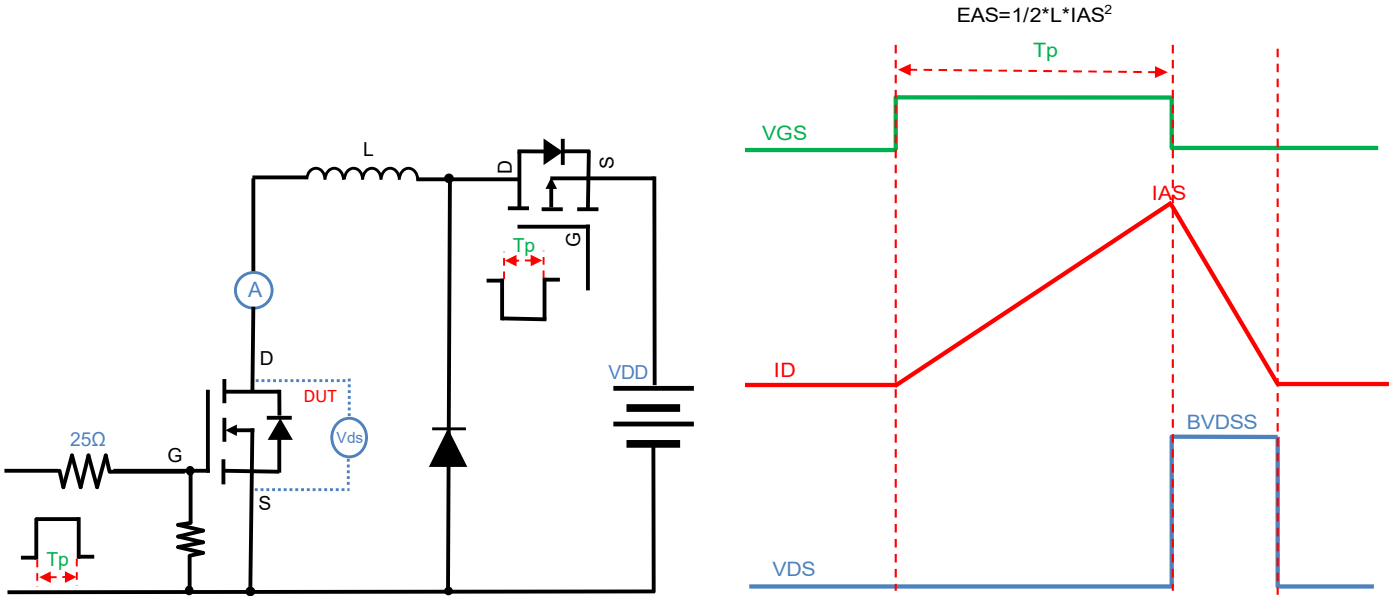

Figure A. Unclamped Inductive Switching (UIS) Test Circuit & Waveform

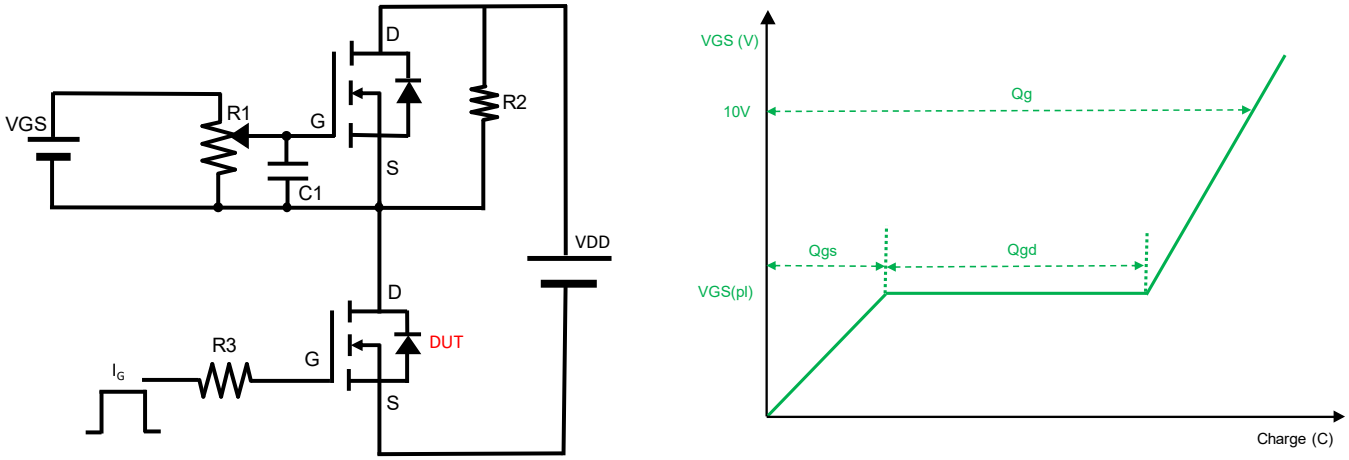

Figure B. Gate Charge Test Circuit & Waveform

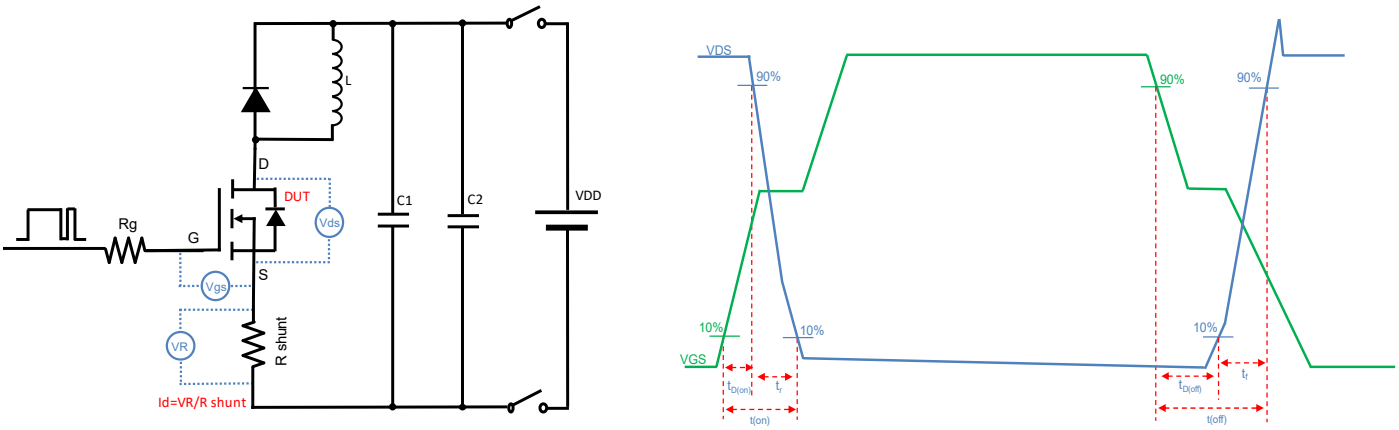

Figure C. Resistive Switching Test Circuit & Waveform

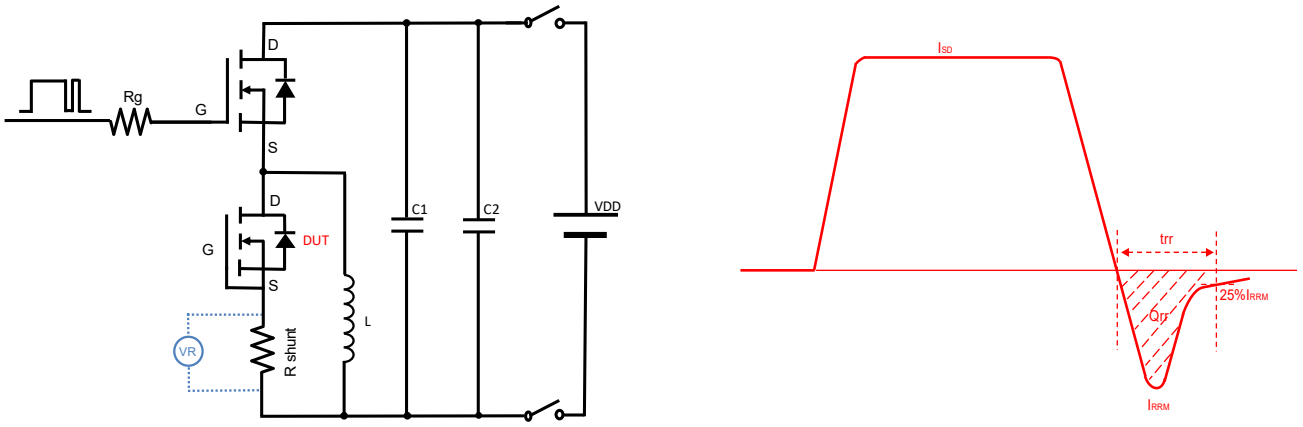

Figure D. Diode Recovery Test Circuit & Waveform

■ PDFN5060-8L-B-1.1MM Package information

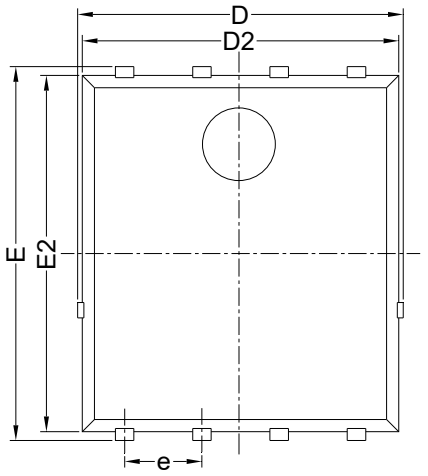

Top View
正面视图

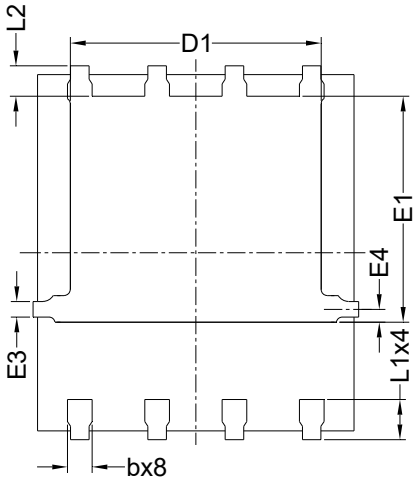

Bottom View
背面视图

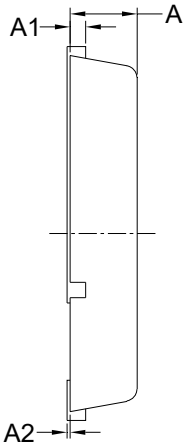

Side View
侧面视图

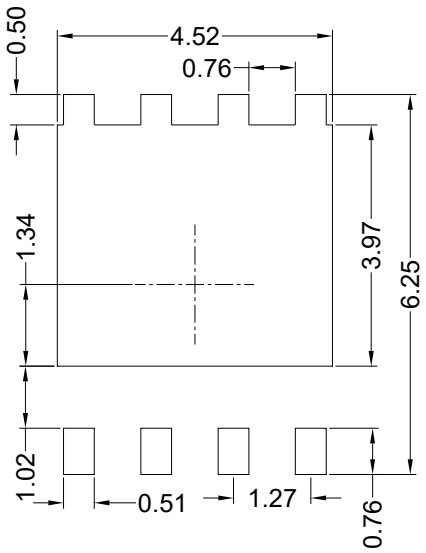

Suggested Solder Pad Layout
Top View

SYMBOL	MILLIMETER		
	MIN	NOM	MAX
D	5.15	5.35	5.55
E	5.95	6.15	6.35
A	1.00	1.10	1.20
A1	0.254 BSC		
A2			0.10
D1	3.92	4.12	4.32
E1	3.52	3.72	3.92
D2	5.00	5.20	5.40
E2	5.66	5.86	6.06
E3	0.254 REF		
E4	0.21 REF		
L1	0.56	0.66	0.76
L2	0.50 BSC		
b	0.31	0.41	0.51
e	1.27 BSC		

Note:
1.Controlling dimension:in millimeters.
2.General tolerance:±0.10mm.
3.The pad layout is for reference purposes only.

■ Marking Information

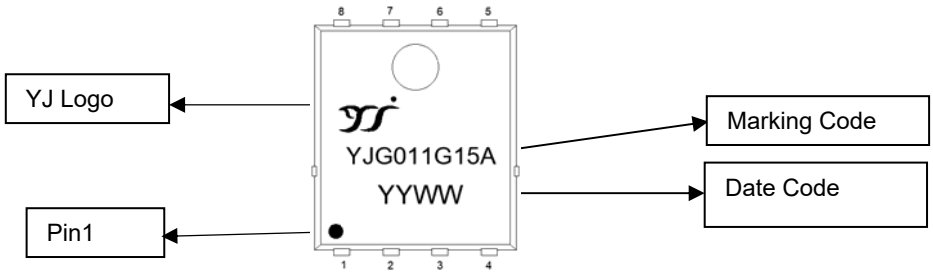

Note：
1. All marking is at middle of the product body
2. All marking is in laser printing
3. YJG011G15A is Marking Code, YYWW is date code, “YY” is year, “WW” is week
4. Body color: Black

Disclaimer

The information presented in this document is for reference only. Yangzhou Yangjie Electronic Technology Co., Ltd. reserves the right to make changes without notice for the specification of the products displayed herein to improve reliability, function or design or otherwise.

The product listed herein is designed to be used with ordinary electronic equipment or devices, and not designed to be used with equipment or devices which require high level of reliability and the malfunction of with would directly endanger human life (such as medical instruments, transportation equipment, aerospace machinery, nuclear-reactor controllers, fuel controllers and other safety devices), Yangjie or anyone on its behalf, assumes no responsibility or liability for any damages resulting from such improper use of sale.

This publication supersedes & replaces all information previously supplied. For additional information, please visit our website http://www.21yangjie.com , or consult your nearest Yangjie's sales office for further assistance.